# Stor-More® Tenant Storage Lockers

*Galvanized Welded Wire - Installation Instructions*

## TABLE OF CONTENTS:


Page 1 | COVER, TOOLS REQ'D
Page 2 | SPECIFICATIONS
Page 3 | PARTS LIST
Page 4 | HARDWARE PROVIDED
Page 5 | STARTER & ADD-ON LOCKER ASSEMBLY INSTRUCTIONS
Page 6 | OPTIONAL SHELF ASSEMBLY INSTRUCTIONS
Page 7 | WALL MOUNTING INSTRUCTIONS
Page 8 | OPTIONAL WIRE BACK & TOP ASSEMBLY INSTRUCTIONS


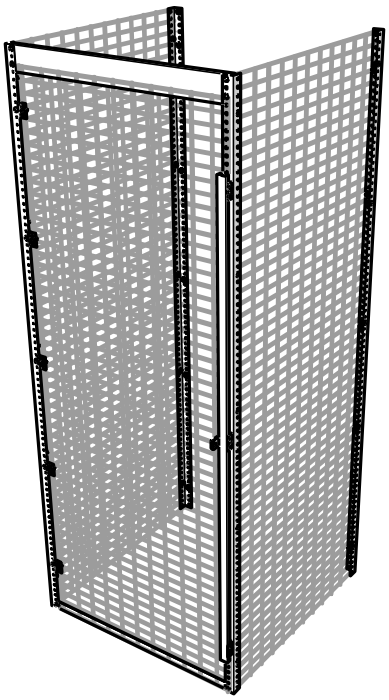

## TOOLS REQUIRED:

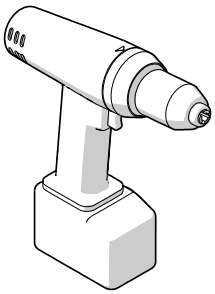

5/16"
[8mm]

BATTERY DRILL
*(ONLY REQUIRED FOR LOCKER TOP)*

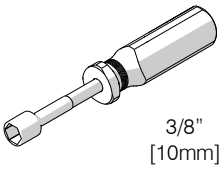

3/8"
[10mm]

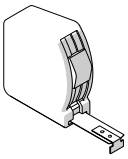

MEASURING TAPE

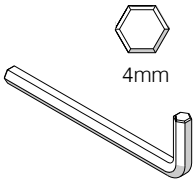

4mm

ALLEN WRENCH

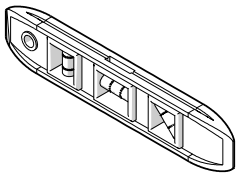

LEVEL

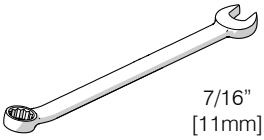

7/16"
[11mm]

OPEN END WRENCH

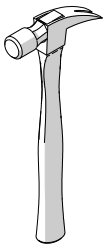

HAMMER

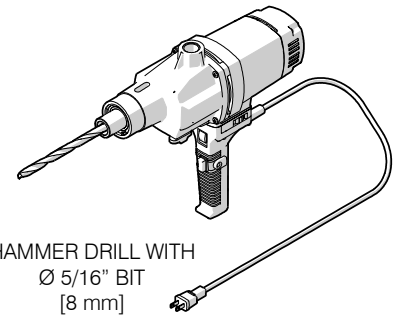

HAMMER DRILL WITH
Ø 5/16" BIT
[8 mm]



©2019 Folding Guard, A Member of Troax Group

# SPECIFICATIONS:

**LOCKER TYPE**

ST - STARTER UNIT
AD - ADD ON UNIT

**WIDTH**

3 - 36” WIDTH
4 - 48” WIDTH

# S T 1 3 3 - G A L V

**NO. OF TIERS**

1 - SINGLE TIER FRONT DOOR
2 - DOUBLE TIER FRONT DOOR
3 - TRIPLE TIER FRONT DOOR

**DEPTH**

3 - 36” DEPTH
4 - 48” DEPTH
5 - 60” DEPTH

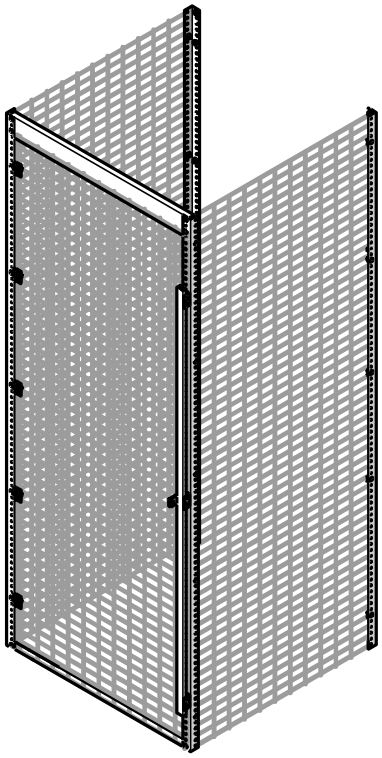

| PART NO. | # OF TIERS | WIDTH | DEPTH | HEIGHT |
|---|---|---|---|---|
| ST133-GALV | 1 | 36” | 36” | 90” |
| ST134-GALV | 1 | 36” | 48” | 90” |
| ST135-GALV | 1 | 36” | 60” | 90” |
| ST143-GALV | 1 | 48” | 36” | 90” |
| ST144-GALV | 1 | 48” | 48” | 90” |
| ST145-GALV | 1 | 48” | 60” | 90” |
| ST233-GALV | 2 | 36” | 36” | 90” |
| ST234-GALV | 2 | 36” | 48” | 90” |
| ST235-GALV | 2 | 36” | 60” | 90” |
| ST243-GALV | 2 | 48” | 36” | 90” |
| ST244-GALV | 2 | 48” | 48” | 90” |
| ST245-GALV | 2 | 48” | 60” | 90” |
| ST333-GALV | 3 | 36” | 36” | 90” |
| ST334-GALV | 3 | 36” | 48” | 90” |
| ST335-GALV | 3 | 36” | 60” | 90” |
| ST343-GALV | 3 | 48” | 36” | 90” |
| ST344-GALV | 3 | 48” | 48” | 90” |
| ST345-GALV | 3 | 48” | 60” | 90” |

| PART NO. | # OF TIERS | WIDTH | DEPTH | HEIGHT |
|---|---|---|---|---|
| AD133-GALV | 1 | 36” | 36” | 90” |
| AD134-GALV | 1 | 36” | 48” | 90” |
| AD135-GALV | 1 | 36” | 60” | 90” |
| AD143-GALV | 1 | 48” | 36” | 90” |
| AD144-GALV | 1 | 48” | 48” | 90” |
| AD145-GALV | 1 | 48” | 60” | 90” |
| AD233-GALV | 2 | 36” | 36” | 90” |
| AD234-GALV | 2 | 36” | 48” | 90” |
| AD235-GALV | 2 | 36” | 60” | 90” |
| AD243-GALV | 2 | 48” | 36” | 90” |
| AD244-GALV | 2 | 48” | 48” | 90” |
| AD245-GALV | 2 | 48” | 60” | 90” |
| AD333-GALV | 3 | 36” | 36” | 90” |
| AD334-GALV | 3 | 36” | 48” | 90” |
| AD335-GALV | 3 | 36” | 60” | 90” |
| AD343-GALV | 3 | 48” | 36” | 90” |
| AD344-GALV | 3 | 48” | 48” | 90” |
| AD345-GALV | 3 | 48” | 60” | 90” |


©2019 Folding Guard, A Member of Troax Group

# PARTS LIST:

FRONT:
FRAMED DOOR

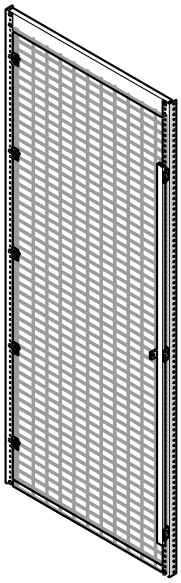

SINGLE TIER (x1)

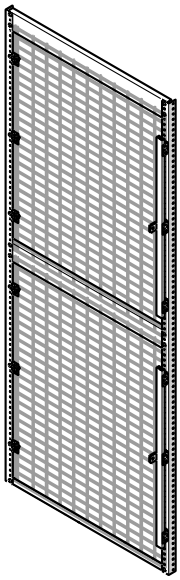

DOUBLE TIER (x1)

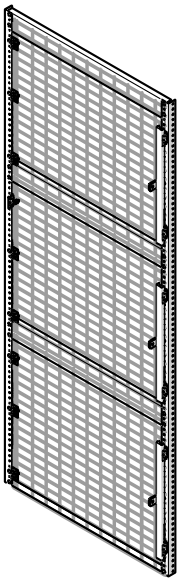

TRIPLE TIER (x1)

SIDE:
WELDED WIRE MESH

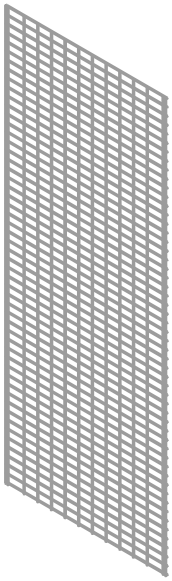

STARTER (x2)
ADD-ON (x1)

SIDE SUPPORT:
(FOR MESH SIDE)

x2

HARDWARE KIT:

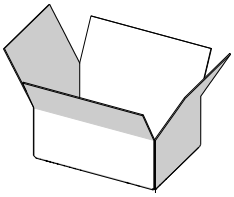

x1

# OPTIONS:

SHELF:
(STANDARD ON DOUBLE TIER
& TRIPLE TIER LOCKERS)

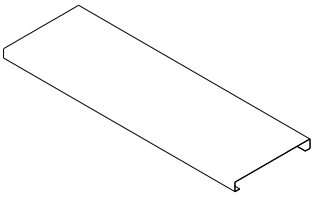

# OF SHELVES PER TIER:
x3 = 36” DEEP
x4 = 48” DEEP
x5 = 60” DEEP

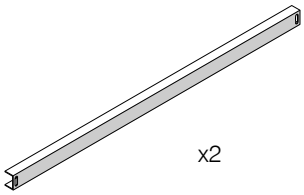

x2

SHELF SUPPORT:
(PROVIDED WITH SHELF)

BACK:
WELDED WIRE MESH

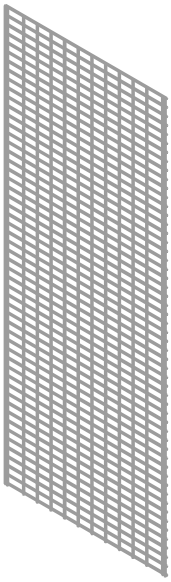

x1

TOP:
WELDED WIRE MESH

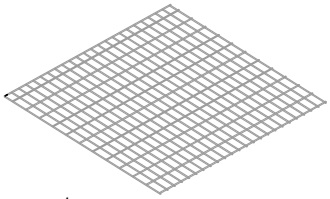

x1

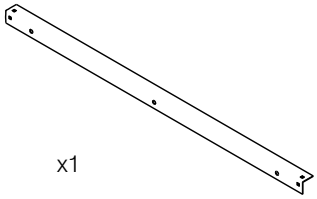

x1

TOP SUPPORT ANGLE:
(PROVIDED WITH TOP)


©2019 Folding Guard, A Member of Troax Group

# HARDWARE PROVIDED:

STARTER LOCKER

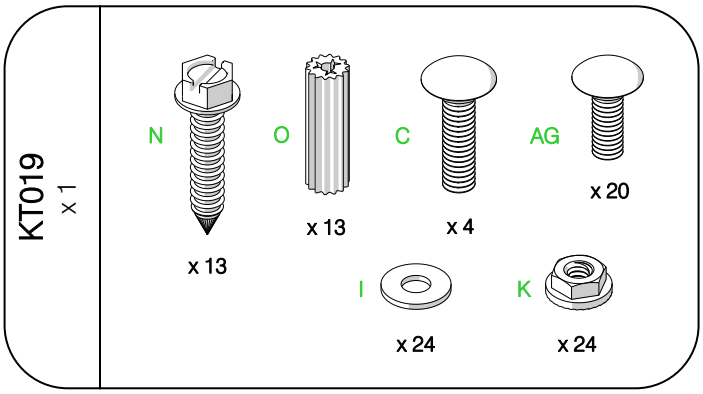


ADD-ON LOCKER

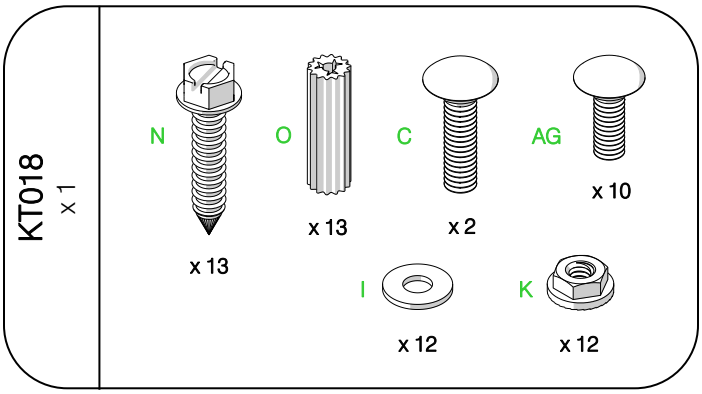


# OPTIONS:

WIRE MESH TOP

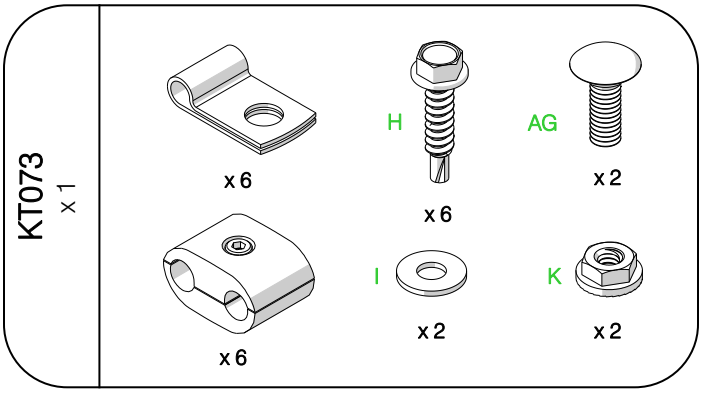


WIRE MESH BACK

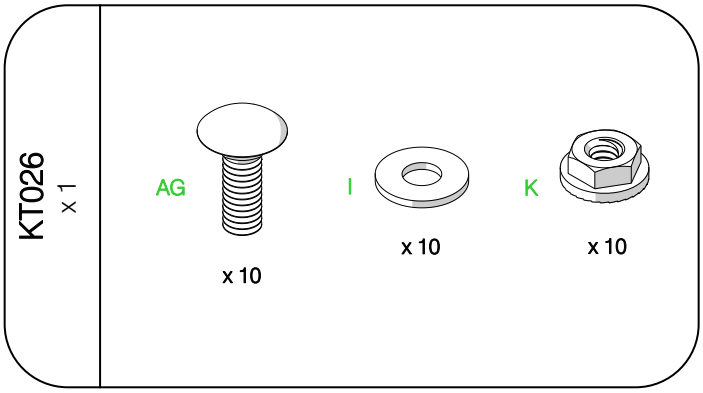


LOCKER SHELF

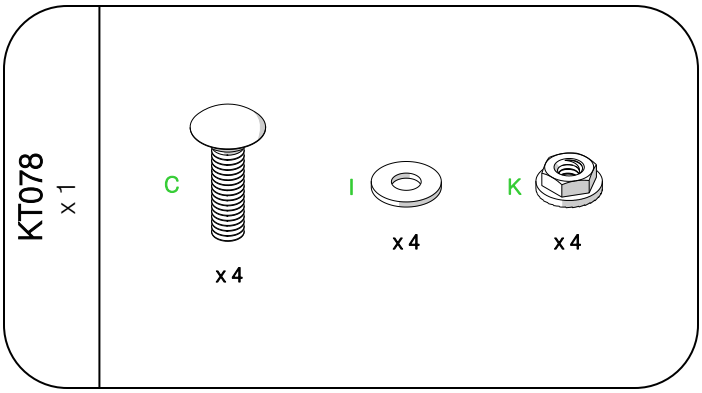


# HARDWARE LIST:

(C) 1/4”-20 x 1” SQUARE NECK CARRIAGE BOLT
(H) #12-14 x 1” HEX HEAD SELF-DRILLING SCREW
(I) 1/4” FLAT WASHER
(K) 1/4”-20 FLANGE NUT
(N) #14-10 x 1-1/4” SLOTTED HEX HEAD SMS
(O) #14 x 1” TUBULAR PLASTIC ANCHOR
(AG) 1/4”-20 x 3/4” SQUARE NECK CARRIAGE BOLT


©2019 Folding Guard, A Member of Troax Group

# 1

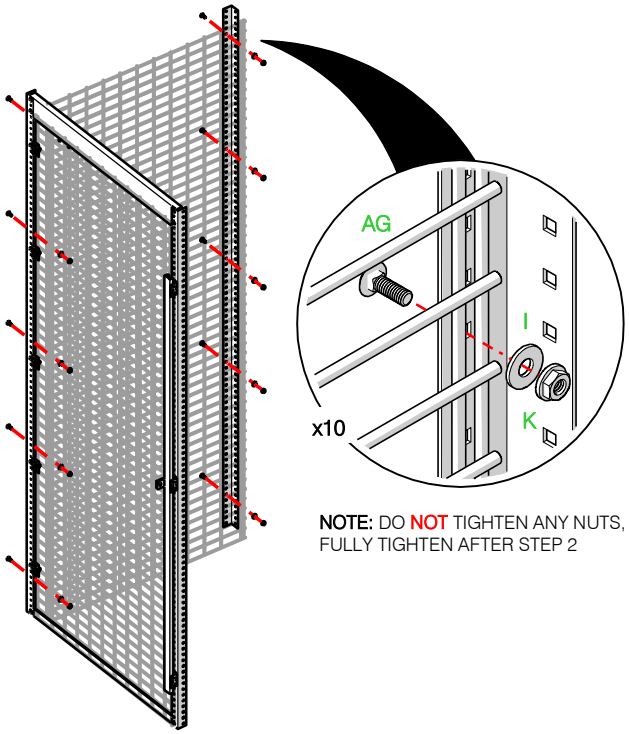


NOTE: DO NOT TIGHTEN ANY NUTS, FULLY TIGHTEN AFTER STEP 2

# 2a STARTER

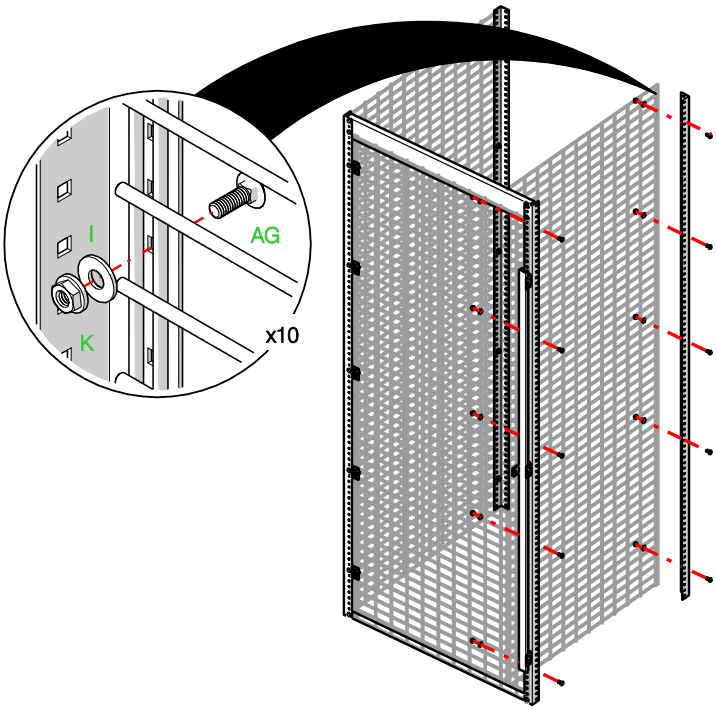


# 2b ADD-ON

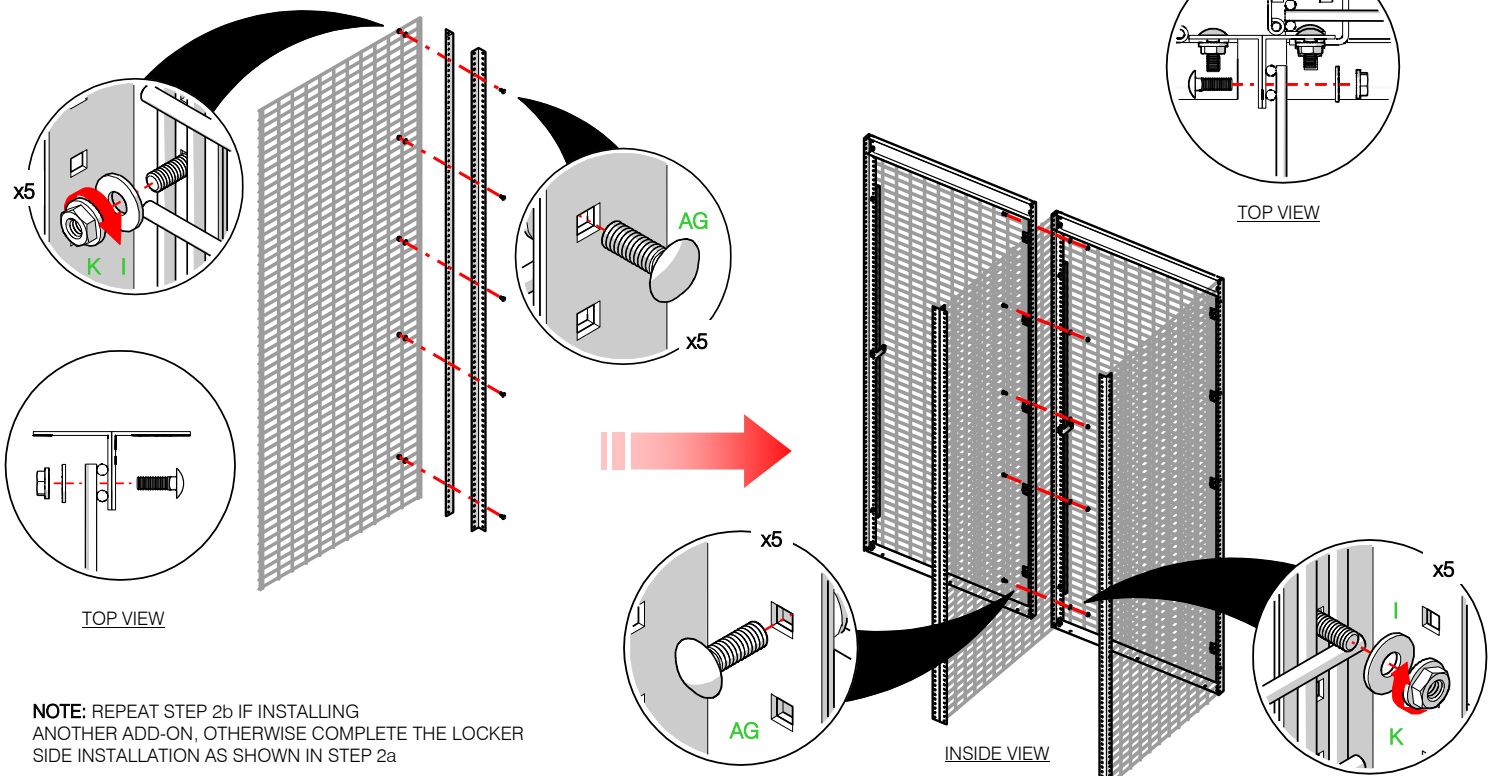


NOTE: REPEAT STEP 2b IF INSTALLING ANOTHER ADD-ON, OTHERWISE COMPLETE THE LOCKER SIDE INSTALLATION AS SHOWN IN STEP 2a


©2019 Folding Guard, A Member of Troax Group

# 3a STARTER

NOTE: STEPS 3 & 4 ARE FOR OPTIONAL SHELF ASSEMBLY

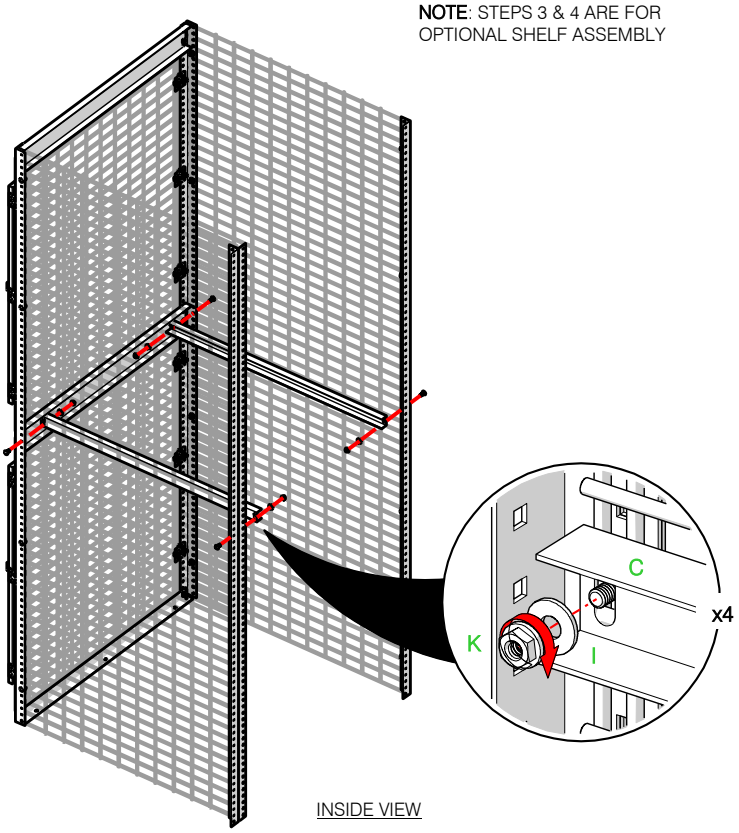


INSIDE VIEW

# 4a

DOUBLE TIER

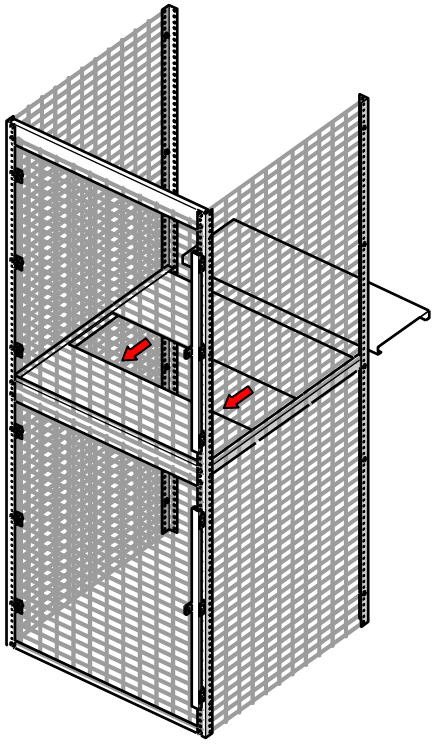

# 4b

TRIPLE TIER

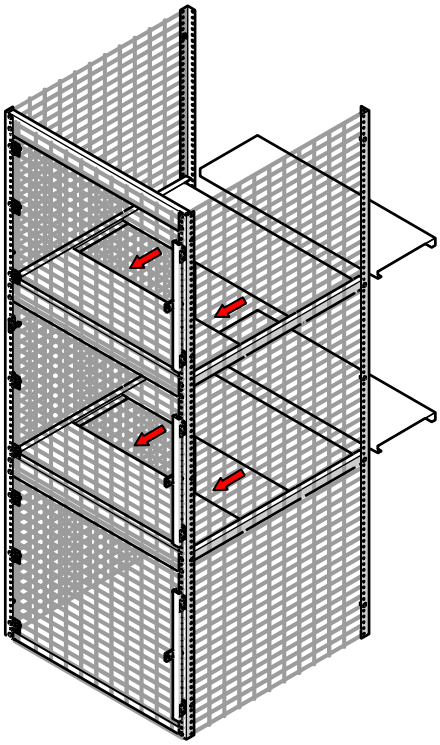

# 3b ADD-ON

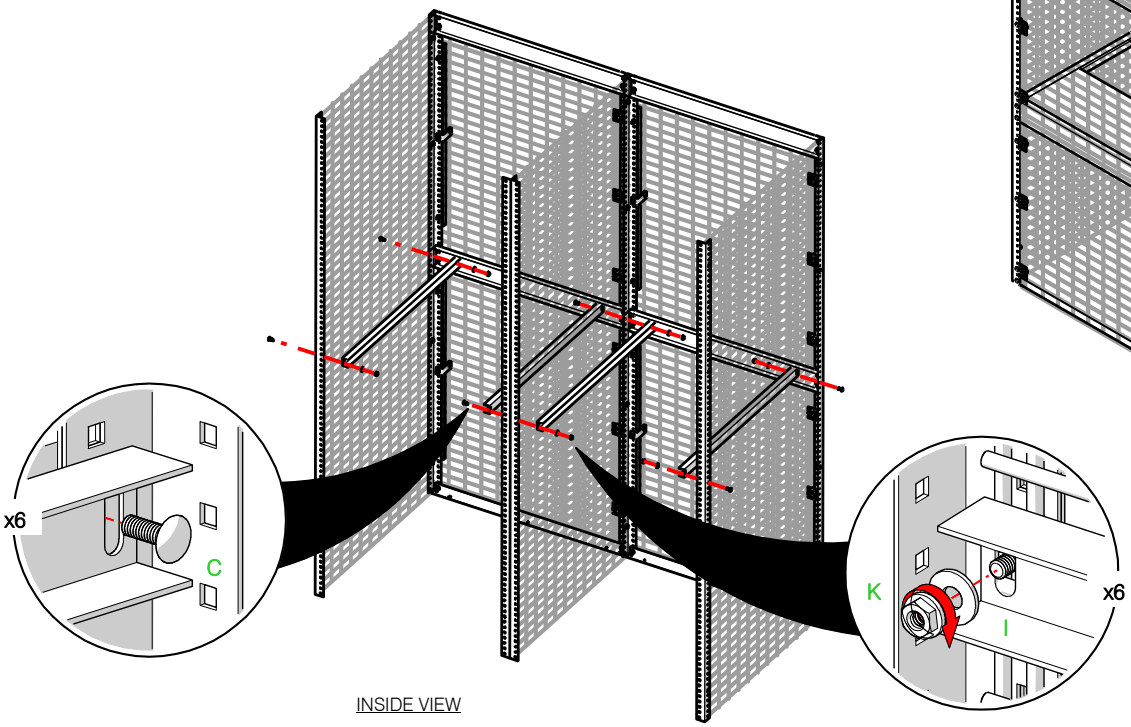


INSIDE VIEW



©2019 Folding Guard, A Member of Troax Group

# 5

NOTE: STEPS 5 - 8 ARE FOR WALL MOUNTING ONLY.

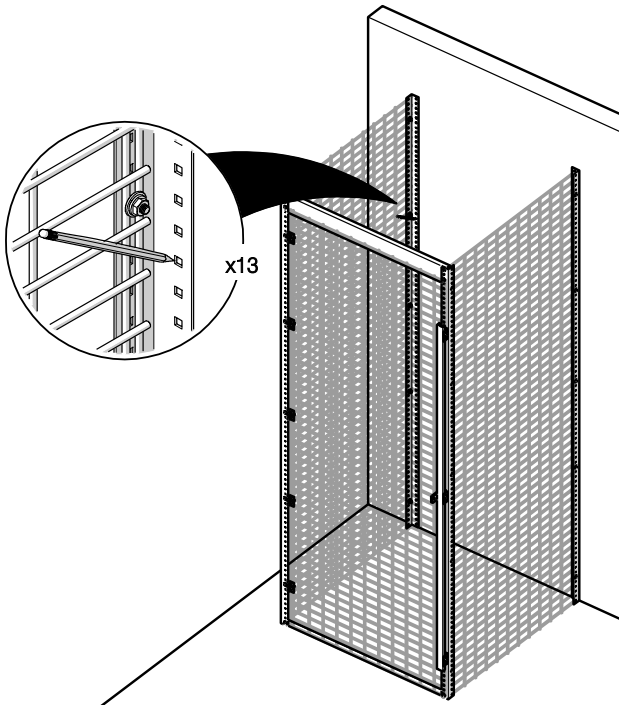


# 6

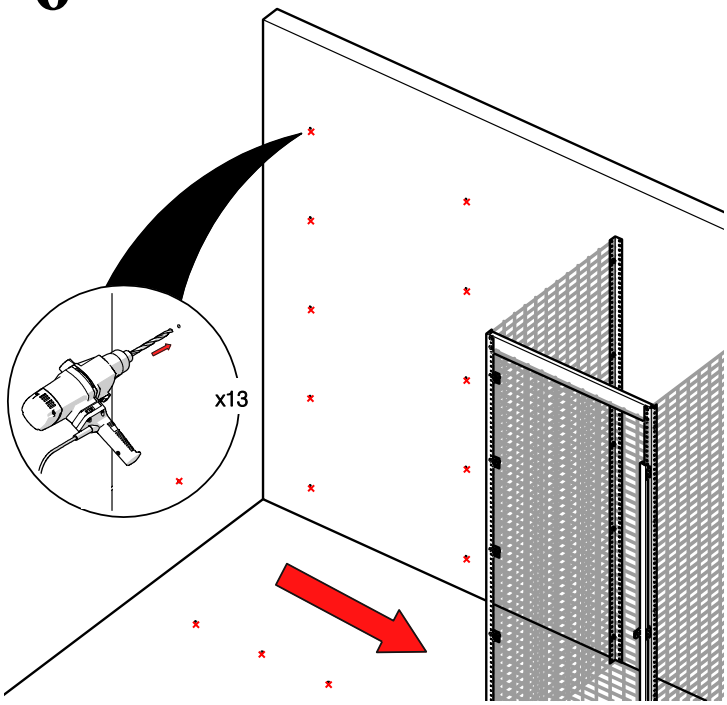


# 7

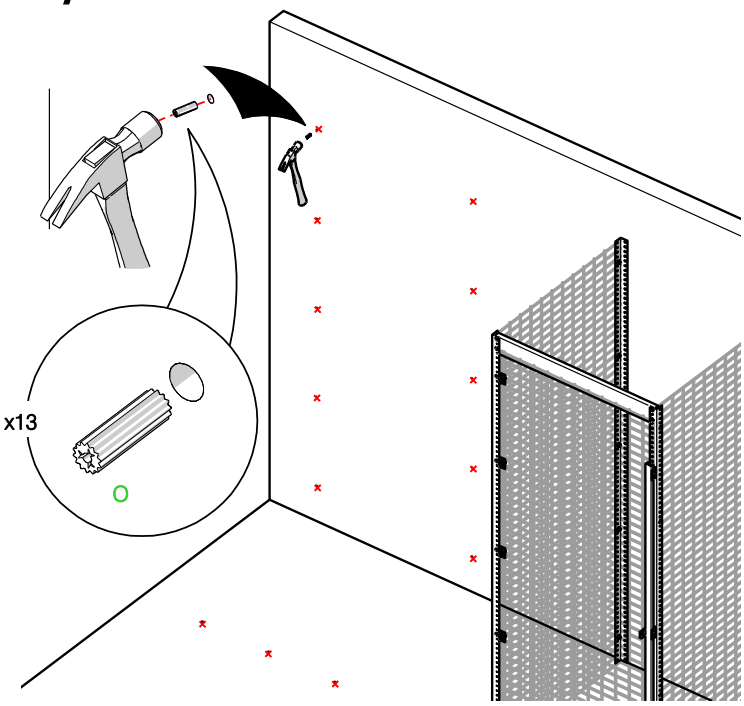


# 8

NOTE: IF INSTALLING AN OPTIONAL WIRE TOP, INSTALL THE TOP SUPPORT ANGLE AS SHOWN IN STEP 10

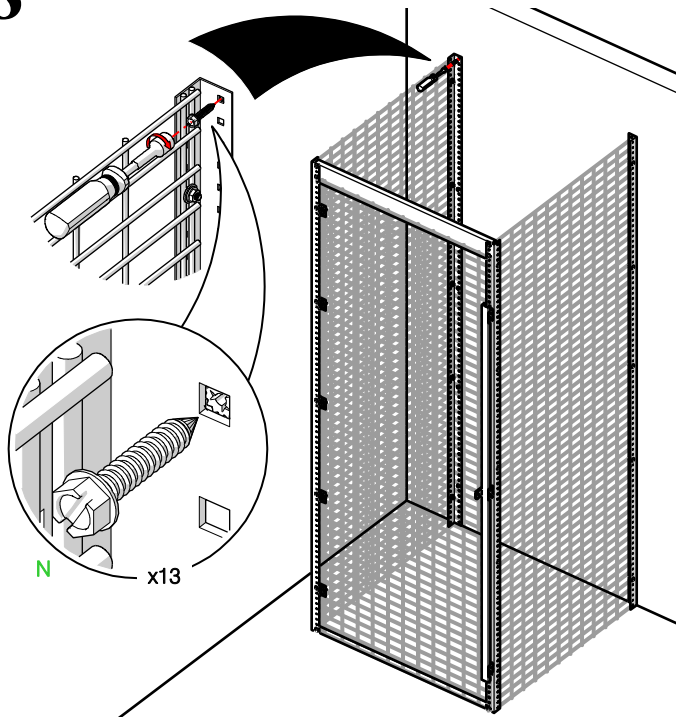



©2019 Folding Guard, A Member of Troax Group

## 9a SINGLE UNIT

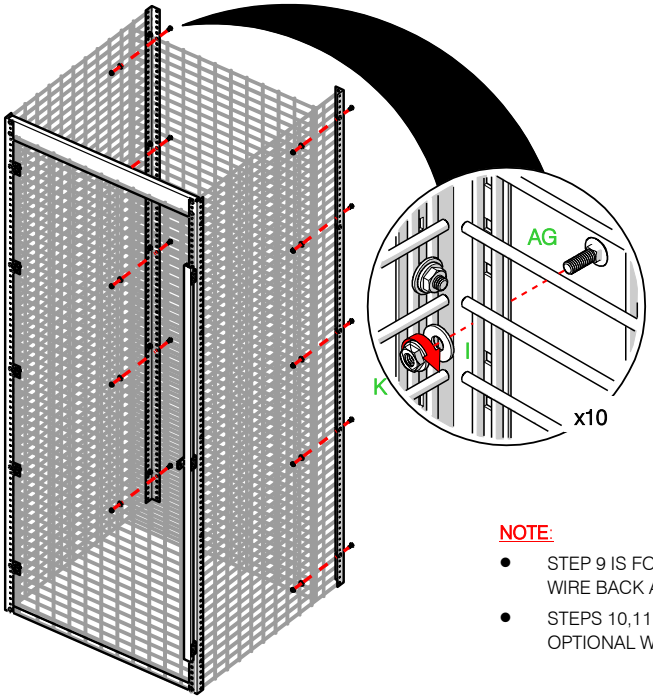


## 9b BACK TO BACK UNIT

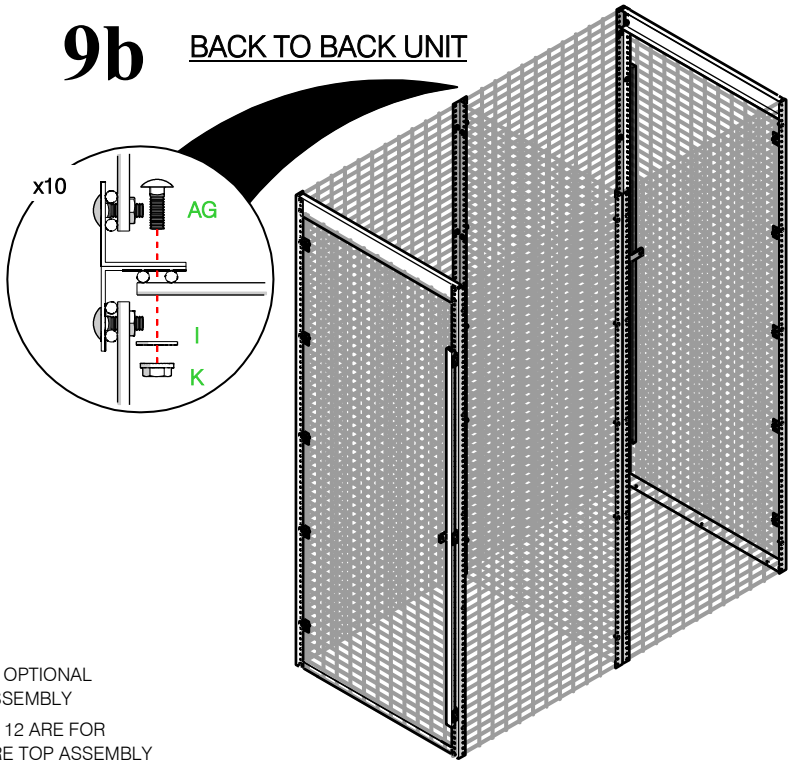


NOTE:

- STEP 9 IS FOR OPTIONAL WIRE BACK ASSEMBLY
- STEPS 10,11 & 12 ARE FOR OPTIONAL WIRE TOP ASSEMBLY

## 10a

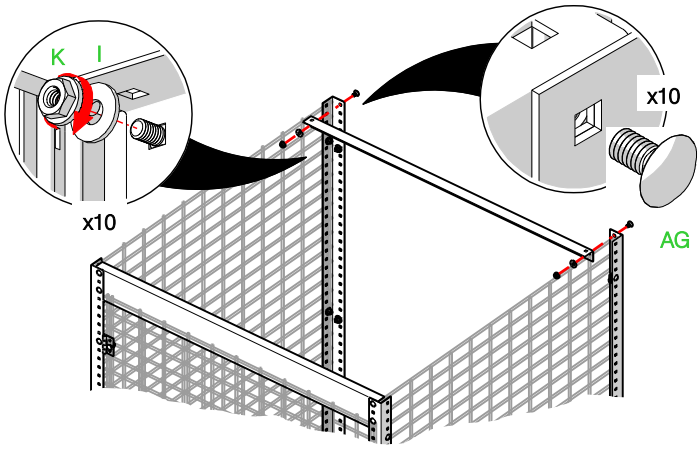


## 10b

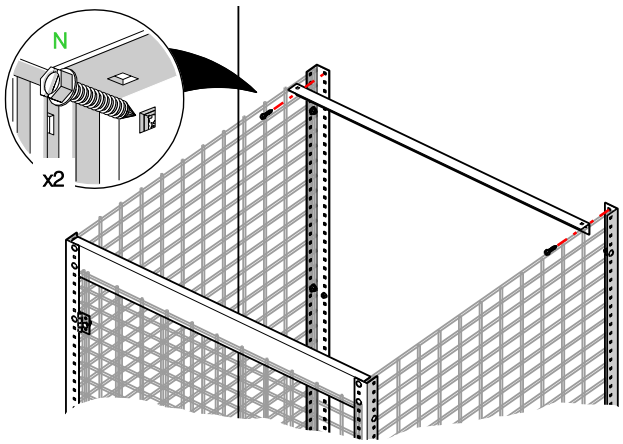


## 11

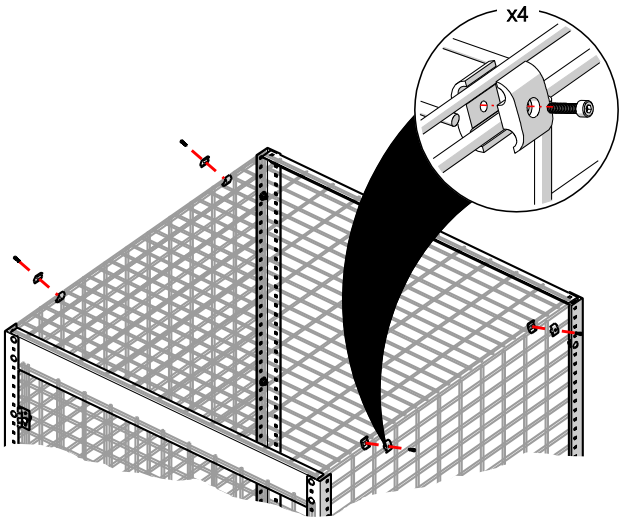


## 12

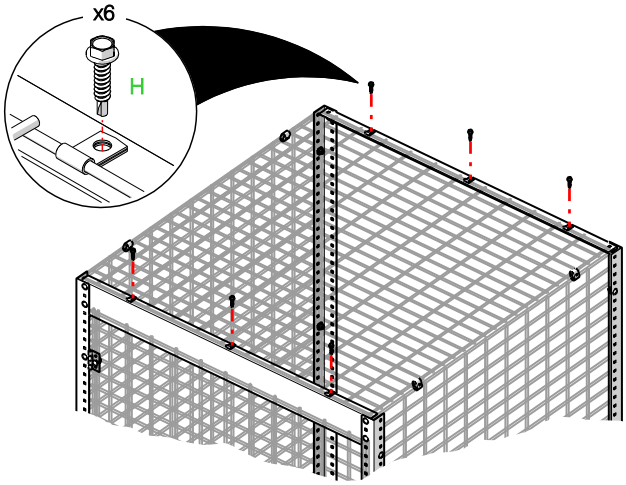



©2019 Folding Guard, A Member of Troax Group